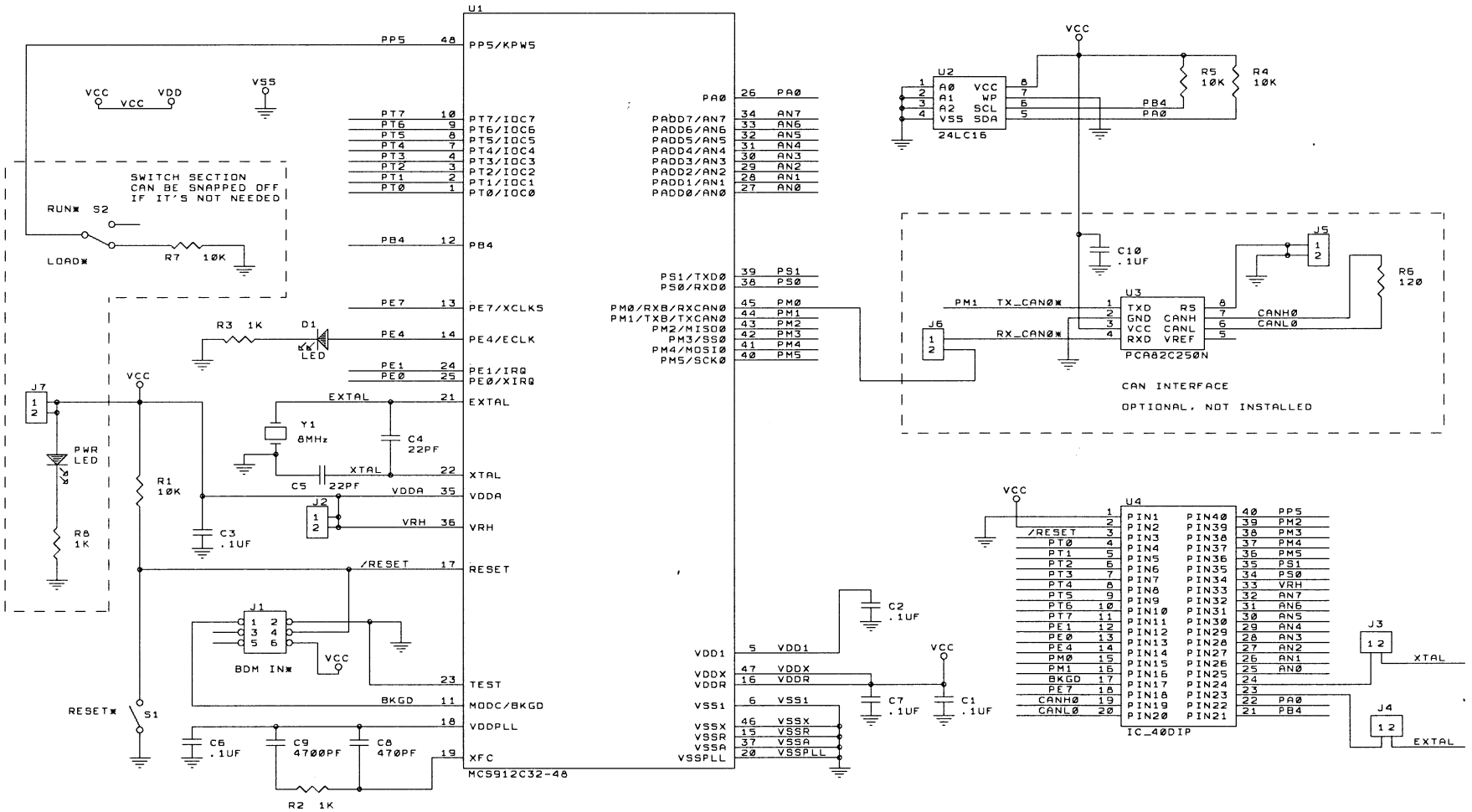

NOTE: TEXT IS FOLLOWED BY A *

EVBPLUS.COM		
Title DRAGONFLY12 PLUS DIP MODULE		
Size B	Document Number 11143	REV A
Date: November 9, 2009	Sheet 1 of 1	