TEXT IS ENDED WITH A '*'

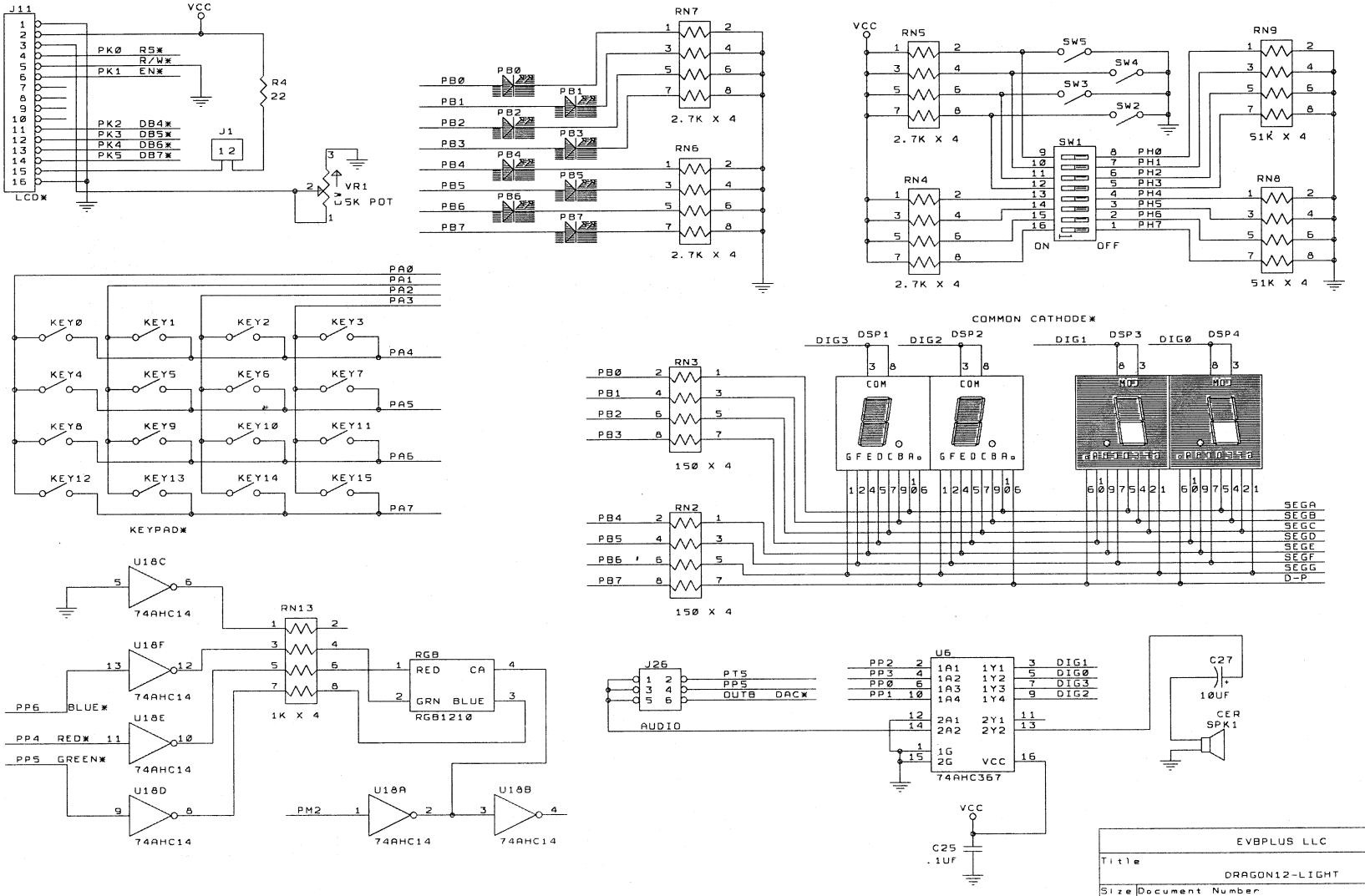

EVBPLUS LLC		
Title: DRAGON12-LIGHT		
Size: B	Document Number: 1175	REV: A
Date: April 20, 2014	Sheet 4 of 4	